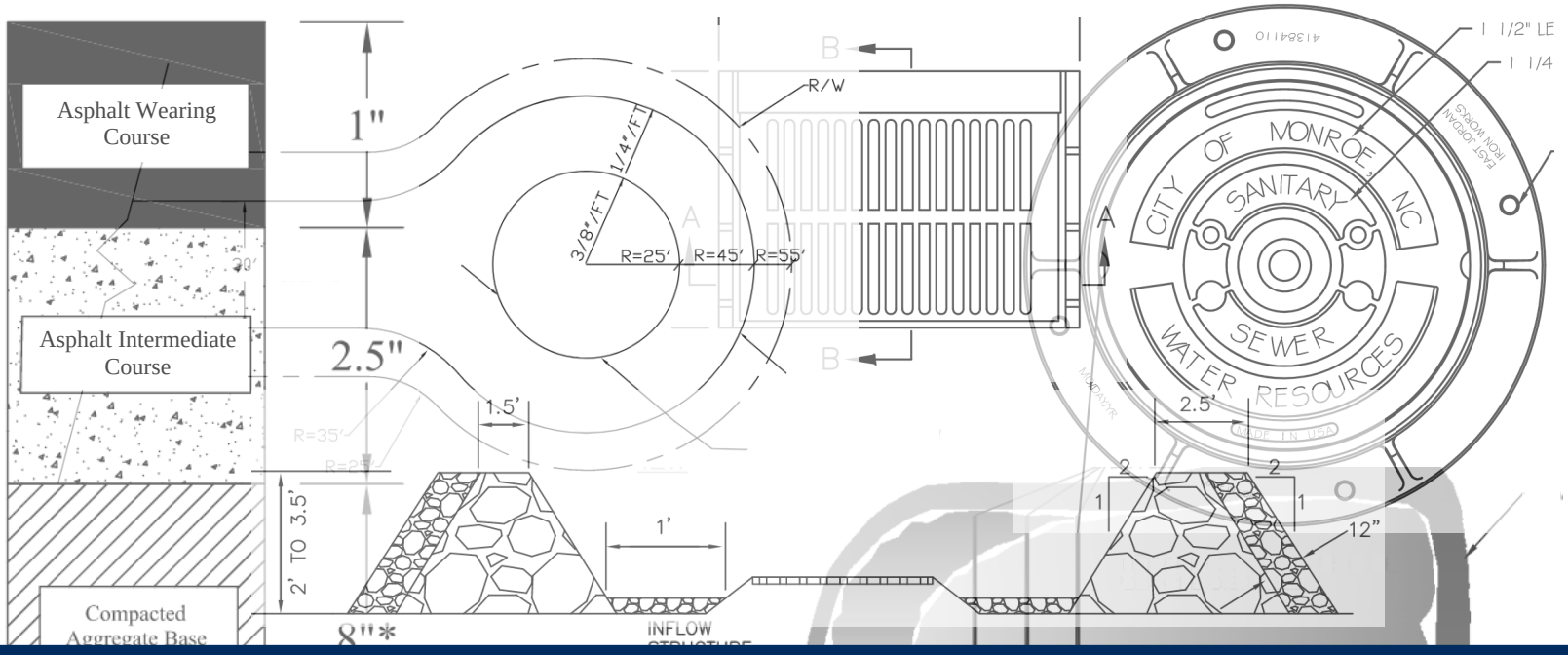

City of Monroe

Standard Specifications and Detail Manual

Revised January 2025

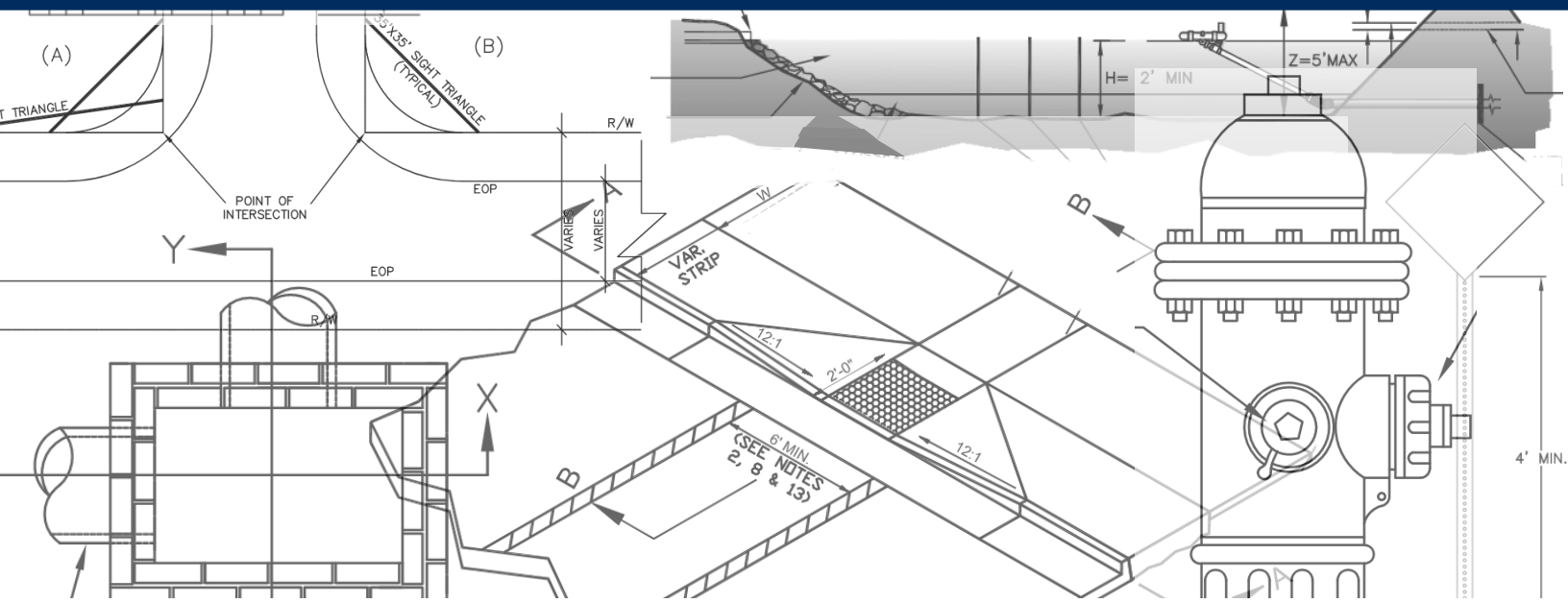

monroenc.org/170/Standard-Specifications

Monroe
North Carolina